SE1054

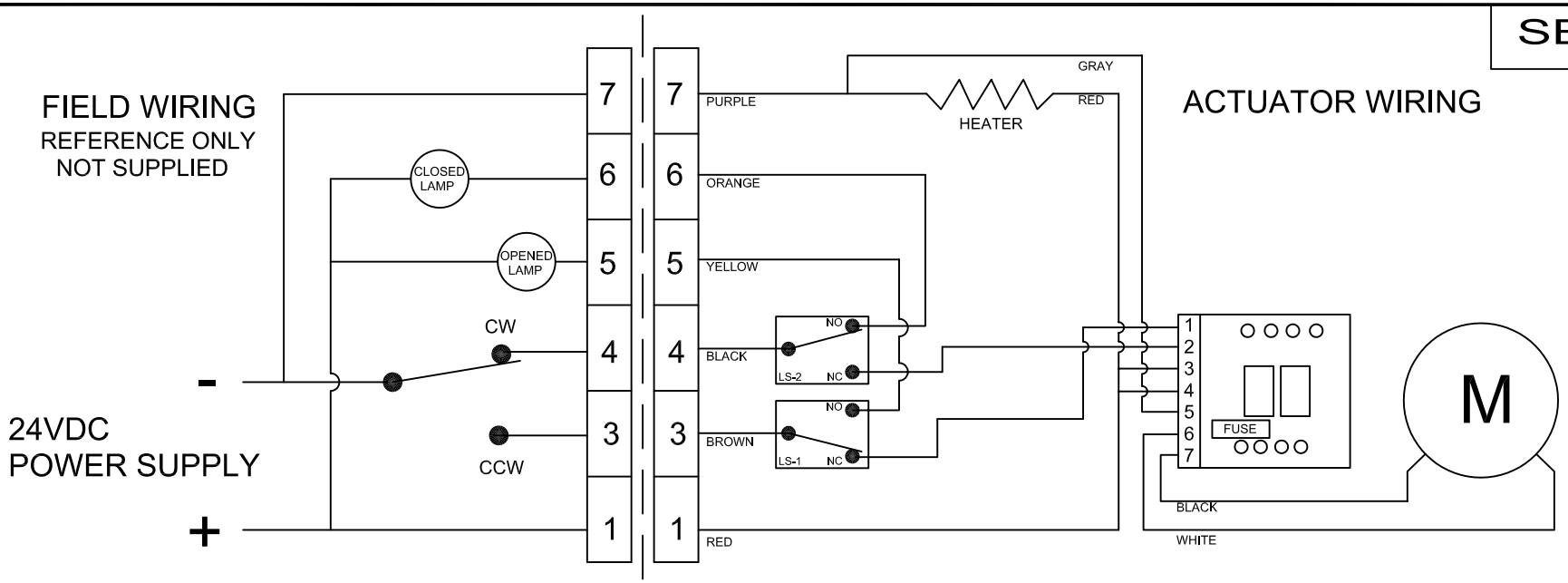


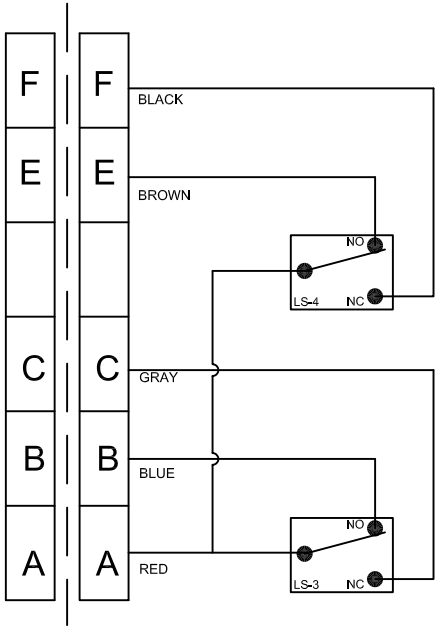


NOTES:

1. FIELD WIRING IS SHOWN FOR REFERENCE ONLY AND IS NOT SUPPLIED WITH ACTUATOR
2. SWITCHES ARE FROM BOTTOM TO TOP (i.e. switch 1 is on the bottom, switch 2 is the next one up, etc.)
3. ROTATION IS VIEWED FROM THE MOTOR SIDE.
4. WIRING DIAGRAM SHOWN IN THE FULL CLOCKWISE POSITION

| ECN | DATE | BY |
|---|---|---|
| ECN# | DATE | BY |

THE DESIGN AND DISCLOSURE CONTAINED IN THIS DRAWING WAS ORIGINATED BY, AND IS EXCLUSIVE PROPERTY OF A-T CONTROLS, INC. IT IS FURNISHED FOR VENDOR INFORMATION ONLY AND IS NOT AN AUTHORIZATION -OR- LICENSE TO MAKE THIS CONSTRUCTION OR TO FURNISH THIS INFORMATION TO OTHERS. ALL DRAWINGS MUST BE RETURNED TO A-T CONTROLS, INC. ON DEMAND. THIS DRAWING IS NOT TO BE REPRODUCED OR COPIED IN ANY FORM WITHOUT THE EXPRESS WRITTEN PERMISSION OF A-T CONTROLS, INC.

TRIAS CONTROLS

Division of A-T Controls, Inc.
11363 Deerfield Road
Cincinnati, Ohio 45242
Phone: (513) 247-5465
Fax: (513) 247-5462

| DRAWN | CHECKED BY | APPROVED |
|---|---|---|
| SAH | | |
| DATE 10/21/04 | DATE | DATE |

TITLE
ETI-300C / ETI-400C WIRING DIAGRAM
24 VDC, 3-WIRE CONTROL

TOLERANCE UNLESS OTHERWISE SPECIFIED:
TWO PLACE DECIMAL DIM. ±0.02
THREE PLACE DECIMAL DIM. ±0.010
ANGULAR DIM. 0°-90°
DO NOT SCALE DRAWINGS