Limit Switches with Positive Opening Mechanism

Positive opening mechanism

LJA Series

Snap action limit switches with positive opening mechanism enables general industrial machines to comply with EC directives and to acquire CE marking.

- ⊖mark (symbol for control switch with positive opening operation) is provided to assist in acquisition of EN approval
- Limit switch conforms to the EN 50041 standard
- UL/CSA/CE/GB(ccc markings) are provided, suitable for machines to be exported to North America and Europe (excluding some models)
- N.C./N.O. electrically independent contacts (Zb) with snap action mechanism
- Use of twin-contact structure improves contact reliability.
- Mounting centers dimensions are compatible with these of LS general purpose limit switches
- High degree of sealing meet immersion proof (JIS) and IP67 (IEC 60529) standards

ORDER GUIDE

Actuator type	Catalog listing	Operating characteristics		
		O.F. (Max.) operating force	P.T. (Max.) pretravel	M.D. (Max.) movement differential
Standard roller lever (Lever length: 30 mm)	**LJA10-11A21N**	11.8 N	25°	13°
Adjustable roller lever	**LJA10-13A21N**	11.8 N	25°	13°
Boot seal roller plunger	**LJA10-57A21N**	18.6 N	3 mm	1.3 mm

STANDARDS COMPLIANCE

Certifying Body	Standard	File No.
UL	UL 508	E 96090
CSA	CSA C22.2 No.14	
TÜV	EN 60947-5-1	R 9551074
CQC	GB14048.5	2003010305083858

INTERNAL SWITCH: N.C./N.O. electrically independent contacts (Zb)

- Iinternal switches in the LJA Series have a twin-contact structure with N.C./N.O. electrically independent contacts (Zb).

- The movable contact plates for the N.C. and N.O. contacts are independent from each other and mutually insulated. This switch is a type of two-circuit and double-breaking switch using twin contacts.

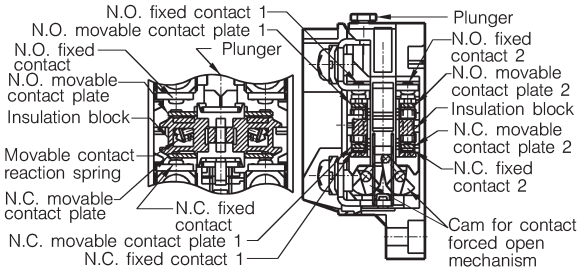

OPERATIONAL DESCRIPTION OF LJA INTERNAL SWITCH

Conventional LS general purpose limit switch·····

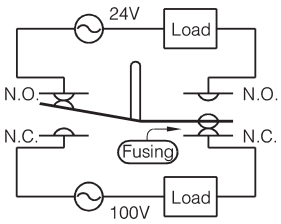

In the conventional two-circuit double-breaking switch, if fusing occurs at the N.C. contact and the switch is activated, N.C. and N.O. circuits can become electrically connected. If this occurs, the power supply circuit may be short-circuited or the load may be burned out depending on the circuit configuration.

LJA switch·····

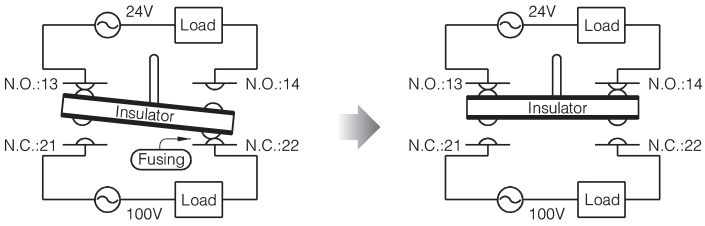

In an LJA Series switch, even if fusing occurs and the switch is activated, N.C. and N.O. circuits cannot be connected. Therefore, even though a separate power supply is put on the N.C. and N.O. sides as shown in the above Figure, the short-circuited power supply and burned out load can be avoided.
Additionally, as the switch is pushed in, the cam is rotated to push up the N.C. contact plate and forcibly release the fused contact.

CONTACTS FORCED OPEN BY CAM (N.C. contacts only)

As shown in the above Figure, the cam forcibly pushes up the N.C. contact from the bottom. With this mechanism, the contacts are forcibly opened even if they are fused.

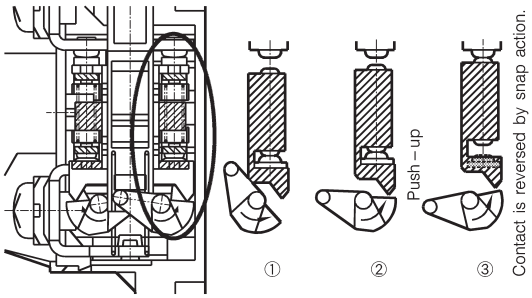

PERFORMANCE

Standards	**Compliance**	NECA C 4508/JIS C 8201-5-1, IEC60947-5-1, EN50041(mounting hole dimension only)
	Certification	EN60947-5-1(TÜV)/UL508(UL)/CSA C22-2 No.14(C-UL)/GB14048.5(CQC)
Structure	**Contact type**	Zb(EN60947-5-1)⊖
	Contact shape	Rivet
	Terminal shape	Screw (M3 round head screw with square washer)
	Protective structure	Immersion proof type (JIS), IP67(IEC60529), Type 6p(UL50)
	Pollution level	3(EN60947-5-1)
Electrical performance (1)General characteristics	**Electrical rating**	See Table 1.
	Dielectric strength	Between non-continuous terminals : 2,100 Vac, 50/60 Hz for 1min. Between each terminal and non-live metal part : 5,300 Vac, 50/60 Hz for 1min. Between each terminal and ground : 5,300 Vac, 50/60 Hz for 1min. Between different terminals : 5,300 Vac, 50/60 Hz for 1min.
	Insulation resistance	100 MΩ or more(by 500 Vdc megger)
	Initial contact resistance	25 mΩ or less (6 to 8 Vdc, thermal current 1A, measured by voltage drop method)
	Recommended min. operating voltage/current	24V-10 mA, 12V-20 mA
Electrical performance (2)EN 60947-5-1 related characteristics	**Rated operating voltage**	400 Vac, 250 Vdc
	Rated thermal current(Ith)	10A
	Rated frequency	AC voltage, 45 to 65 Hz, and DC voltage
	Short-circuit protection	BUSSMANN KTK-10 (10A) fast acting fuse or equivalent, (TÜV)/ 10A fast acting fuse (CQC)
	Rated insulation voltage(Ui)	500 Vac or 275 Vdc
	Conditional rated short-circuit current	1,000A (with coil load)
	Switching over-voltage	Category III (IEC60204-1)
	Rated impulse withstanding voltage (Uimp)	Between each terminal and non-live metal part : 6000V, Between non-continuous terminals : 7400V
	Electrical protection	class I(IEC 60536)
Mechanical performance	**Actuator strength**	Roller lever type : 49 N in operating direction for 1min. or more Plunger type : 93 N in operating direction for 1min. or more Rod lever type : 12 N in operating direction for 1min. or more
	Terminal strength	Withstands tightening torque of 1.0 N-m for 1min.
	Impact resistance	300 m/s^2, contact opening for 1ms. or less in free position and total travel position.
	Vibration resistance	Frequency: 10 to 55 Hz, peak-to-peak amplitude: 1.5 mm, continuous for 2hrs. Contact opening for 1ms. or less in free position and total travel position.
	Allowable operating speed	1 mm/s to 0.5 mm/s Min. speed: 0.1 s or less in the unstable contact status. Max. speed: Actuator should not be broken.
	Operating frequency	120 operations/min. or less
Life	**Mechanical life**	Lever type: 15million operations or more. Plunger type: 5million operations or more
	Electrical life	100,000 operations or more (rated load, open/close frequency: 20operations/min. or less)
Environmental conditions	**Operating temperature range**	–25 to +70˚C (No freezing allowed.)
	Operating humidity range	98%RH or less
Recommended tightening torque	**Body**	5 to 6 N-m (M5 screw)
	Terminal	0.6 to 1.0 N-m (M3 round head screw with square washer)
	Cover	1.3 to 1.7 N-m (M4 screw)
	Head	0.8 to 1.2 N-m (M3.5 screw)
	Roller lever	4 to 5.2 N-m (M5 screw)

Note 1. The values stated in the above table are common to all LJA10 Series models.
Note 2. The values for the roller lever type are for a lever length of 30 mm.

●Table 1. Electrical rating

EN 60947-5-1	UL508
AC-15:Ue=AC400V, Ie=2A Ue=AC240V, Ie=3A DC-13:Ue=DC250V, Ie=0.27A	2A/400 Vac General Use Load 3A/240 Vac General Use Load 0.27A/240 Vdc 0.55A/120 Vdc

Category used AC-15: Solenoid load
DC-13: Solenoid load
Ue: Rated operating voltage
Ie: Rated operating current

CONTACT CONFIGURATION

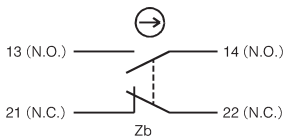

Zb: Mutually insulated twin-contact type double gap contact element with 4 terminals (**EN 60947-5-1**)
⊖: Symbol for control switch with positive opening circuit operation (**EN60947-5-1**)

APPEARANCE, OPERATING CHARACTERISTICS, AND EXTERNAL DIMENSIONS

(unit: mm)

●Roller lever

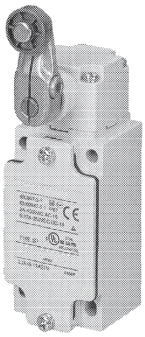

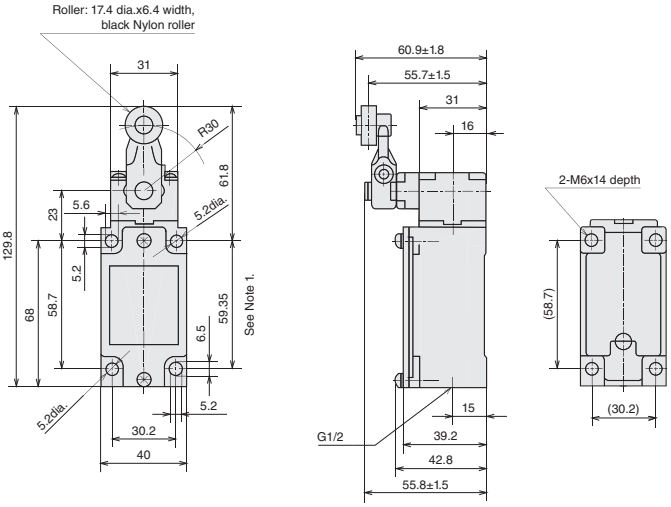

Catalog listing		LJA10-11A21N
O.F. (operating force)	(N max.)	11.8
R.F. (release force)	(N min.)	0.5
P.T. (pretravel)	(˚ max.)	25
O.T. (overtravel)	(˚ min.)	45
M.D. (movement differential)	(˚ max.)	13
T.T. (total travel)	(˚ min.)	70
P.O. (travel to positive opening position)	(˚ max.)	55
P.O.F. (positive opening force)	(N max.)	12.7

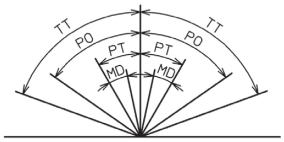

Note 1. A mounting pitch of 58.7 to 60 is possible.
Note 2. When using N.C. for safety, a push-in amount exceeding the P.O. point shown on the left should be kept.
Note 3. Dimensional tolerance is ±0.8 unless otherwise specified.

● Adjustable roller lever

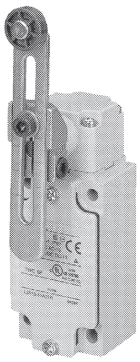

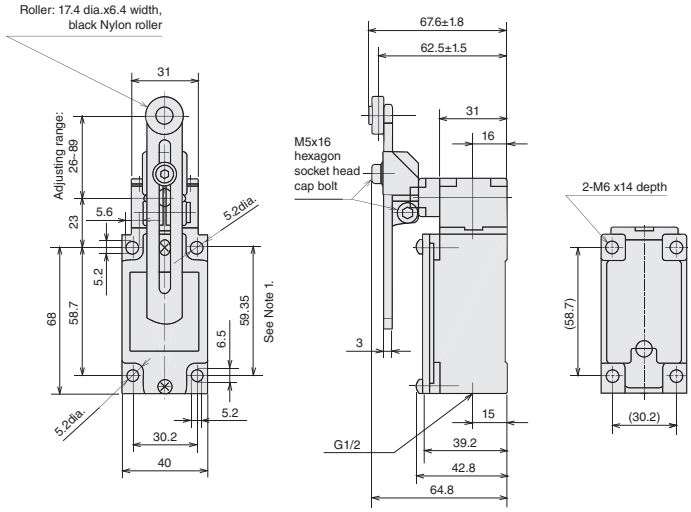

Catalog listing		LJA10-13A21N
O.F. (operating force)	(N max.)	11.8
R.F. (release force)	(N min.)	0.5
P.T. (pretravel)	(˚ max.)	25
O.T. (overtravel)	(˚ min.)	45
M.D. (movement differential)	(˚ max.)	13
T.T. (total travel)	(˚ min.)	70
P.O. (travel to positive opening position)	(˚ max.)	55
P.O.F. (positive opening force)	(N max.)	12.7

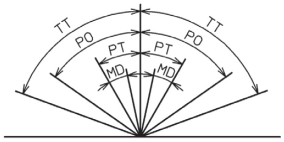

Note 1. A mounting pitch of 58.7 to 60 is possible.
Note 2. When using N.C. for safety, a push-in amount exceeding the P.O. point shown on the left should be kept.
Note 3. Dimensional tolerance is ±0.8 unless otherwise specified.

Boot seal roller plunger

(unit: mm)

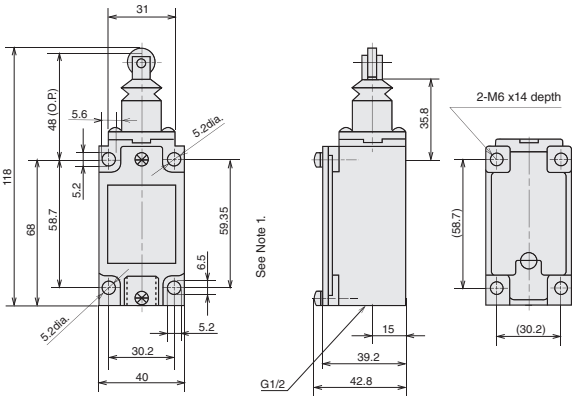

Catalog listing		LJA10-57A21N
O.F. (operating force)	(N max.)	18.6
R.F. (release force)	(N min.)	2.0
F.P. (free position)	(mm max.)	51
O.P. (operating position)	(mm)	48 ±1
P.T. (pretravel)	(mm max.)	3
O.T. (overtravel)	(mm min.)	4.5
M.D. (movement differential)	(mm max.)	1.3
T.T. (total travel)	(mm min.)	6.5
P.O. (travel to positive opening position)	(mm max.)	5.5
P.O.F. (positive opening force)	(N max.)	27

Note 1. A mounting pitch of 58.7 to 60 is possible.
Note 2. When using N.C. for safety, a push-in amount exceeding the P.O. point shown on the left should be kept.
Note 3. Dimensional tolerance is ±0.8 unless otherwise specified.

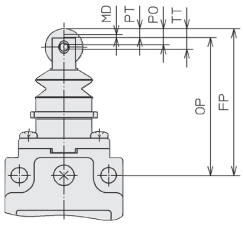

● Auxiliary actuators

• LS-6PA64-102

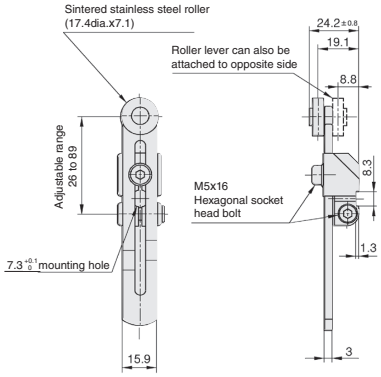

• LS-6PA64-201, LS-6PA64-202

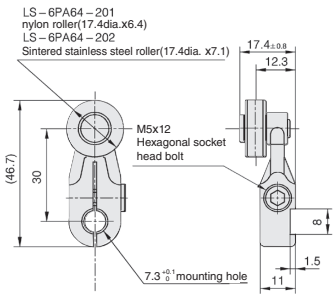

• LS-6PA64-211, LS-6PA64-212

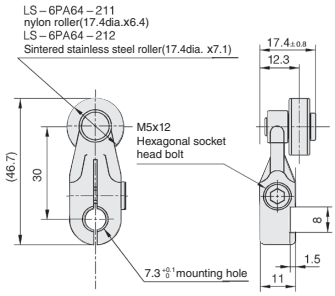

HANDLING PRECAUTIONS

1. Changing the operating direction of a roller lever switch

Roller lever switch are factory-assembled to operate in both directions. It is possible to change to one operating direction (clockwise or counterclockwise) corresponding to the customer's operation method. To change the operating direction, follow the steps below.

Step 1. Loosen the four screws on the switch head and remove it.
Step 2. Turn over the head, push the internal plunger guide (black cylindrical part), and then turn it to set the desired operating direction. Set the mark on the internal plunger guide to RL, R, or L on the head to set the desired operation.

RL: operation in both directions
R : operation in clockwise direction (CW)
L : operation in counterclockwise direction (CCW)

Step 3. Reassemble the switch head and body.

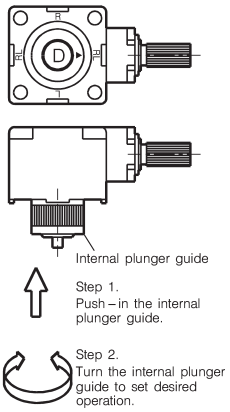

2. Mounting the switch

The mounting of **LJA** Series limit switches is compatible with that of **LS** Series general purpose compact switches. Mount the switch as shown in the following Figures.

2.1 Mounting the LJA Series switch (mounting in conformity with EN 50041)

(unit: mm)

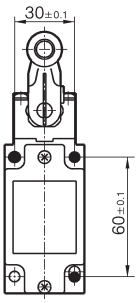

Three mounting holes indicated by "•" shown in the Fig. on the left, that is, 5.2dia. hole, oval hole 5.2 x 5.6, and oval hole 5.2 x 6.5, can be secured.
Note. The back mounting cannot be performed using the mounting hole having a mounting pitch of 30 x 60.

2.2 If mounting compatibility with LS Series general purpose compact switch is required

Mounting the **LS -J** Series switch

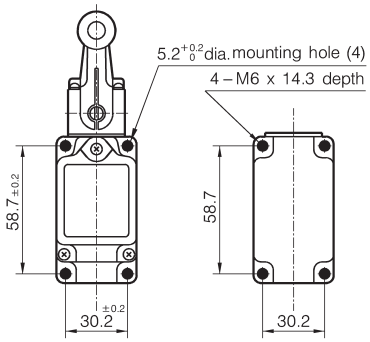

Four 5.2dia. mounting holes indicated by "•" shown in the Fig. on the left can be secured or four M6 screws on the back can be secured.

Mounting the **LJA** Series switch

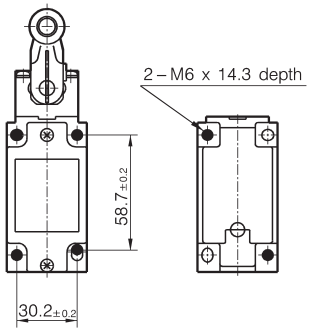

Two M6 screws diagonally opposite to each other on the back of the switch indicated by "•" shown in the Fig. can be secured, or two 5.2dia. mounting holes diagonally opposite to each other or four 5.2dia. mounting holes can be secured.

3. Wiring

- Do not wire while the power is ON. There is a danger of electrical shock or unexpected movement of the mechanism.

4. Adjustment

- Do not apply excessive force (5 times the O.F. or more) to the actuator beyond the travel limit position. Doing so may damage the switch.
- Set the overtravel between 1/3 and 2/3 of the rated value. With a small overtravel, vibration or shock may cause the contacts to rattle or to make poor contact.

5. Environment

- Do not use the switch in an environment where strong acid or alkali is directly splashed onto it.