SE1040

LIMIT SWITCH BOX (2 SPDT) WIRING DIAGRAM

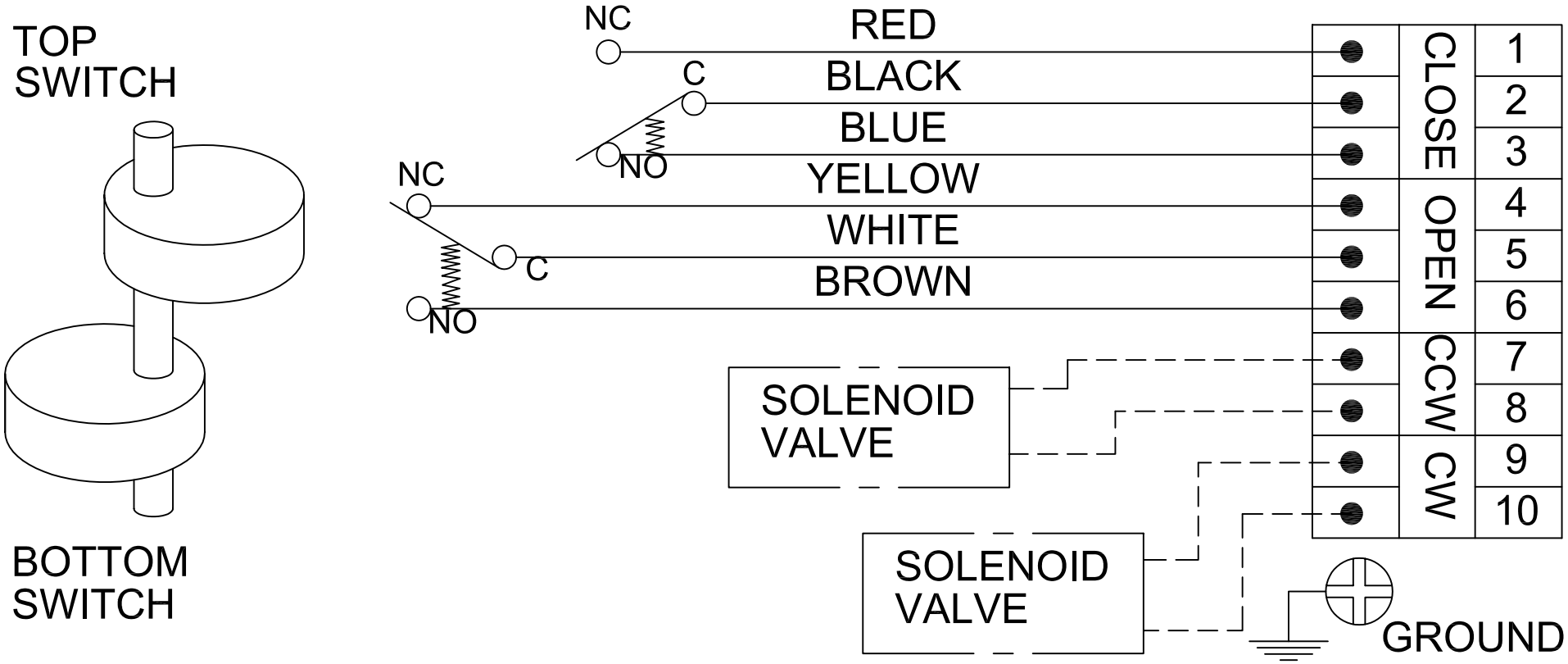

ECN#	DATE	BY
.	.	.

THE DESIGN AND DISCLOSURE CONTAINED IN THIS DRAWING WAS ORIGINATED BY, AND IS EXCLUSIVE PROPERTY OF A-T CONTROLS, INC. IT IS FURNISHED FOR VENDOR INFORMATION ONLY AND IS NOT AN AUTHORIZATION -OR- LICENSE TO MAKE THIS CONSTRUCTION OR TO FURNISH THIS INFORMATION TO OTHERS. ALL DRAWINGS MUST BE RETURNED TO A-T CONTROLS, INC. ON DEMAND. THIS DRAWING IS NOT TO BE REPRODUCED OR COPIED IN ANY FORM WITHOUT THE EXPRESS WRITTEN PERMISSION OF A-T CONTROLS, INC.

TRIAD CONTROLS
Division of A-T Controls, Inc.
11363 Deerfield Road
Cincinnati, Ohio 45242
Phone: (513) 247-5465
Fax: (513) 247-5462

DRAWN	CHECKED BY	APPROVED
BAG		
DATE 08/17/04	DATE	DATE

TITLE: WIRING DIAGRAM FOR THE APL-310N LIMIT SWITCH

TOLERANCE UNLESS OTHERWISE SPECIFIED:
TWO PLACE DECIMAL DIM. ±0.02
THREE PLACE DECIMAL DIM. ±0.010
ANGULAR DIM. ±0°-30°
DO NOT SCALE DRAWINGS